REVISIONS					
CHK DATE	CHK BY	DESCRIPTION	DATE	BY	REV
3/3/2023	JRP	SERVICE AREA	3/3/2023	VLD	02

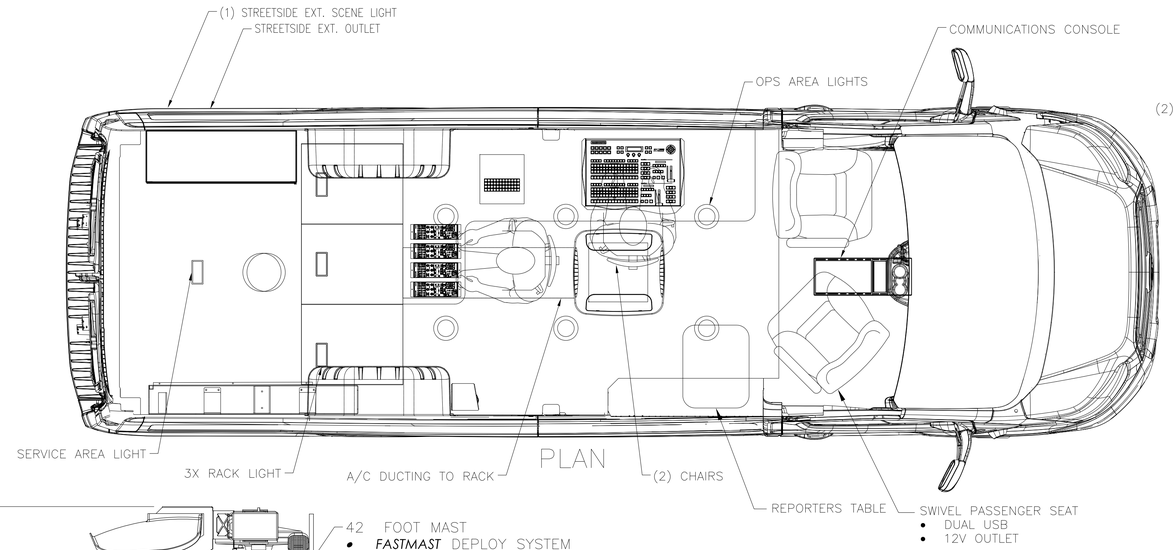

PLAN

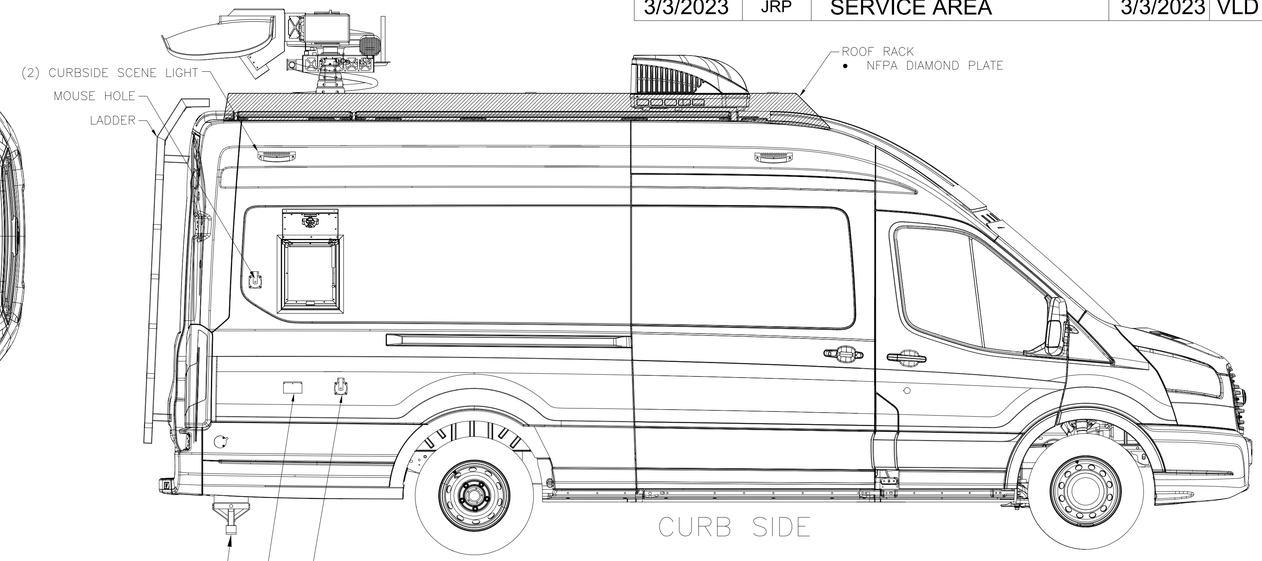

CURB SIDE

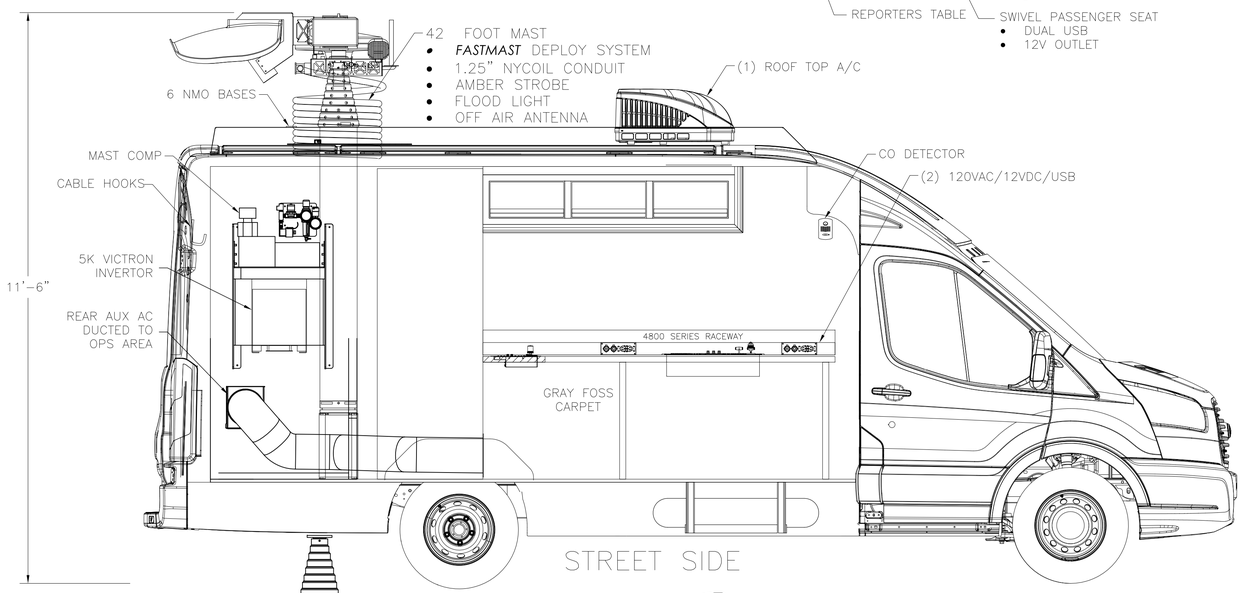

STREET SIDE

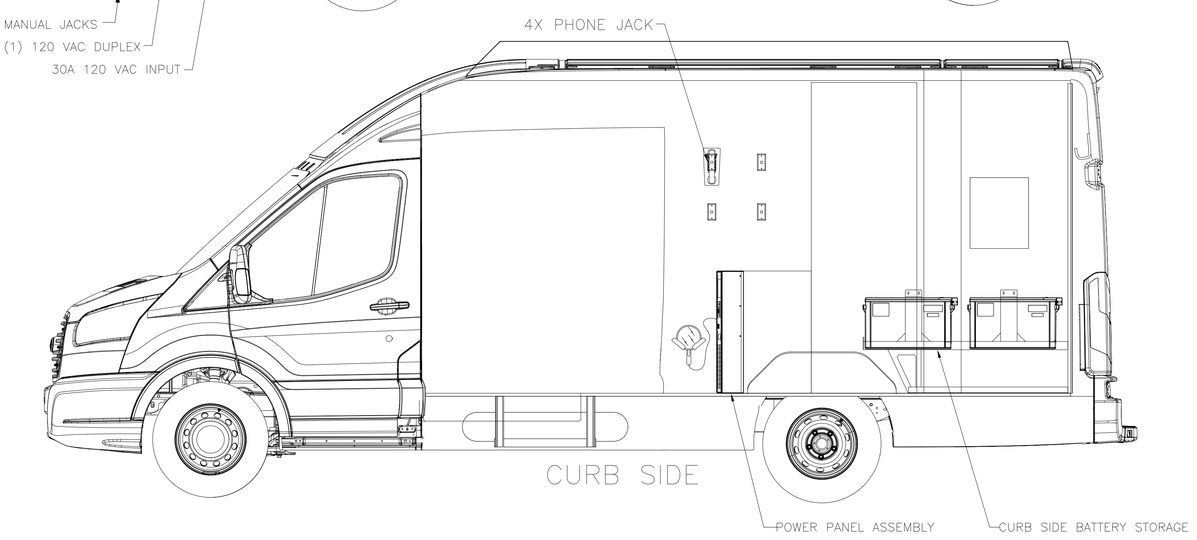

CURB SIDE

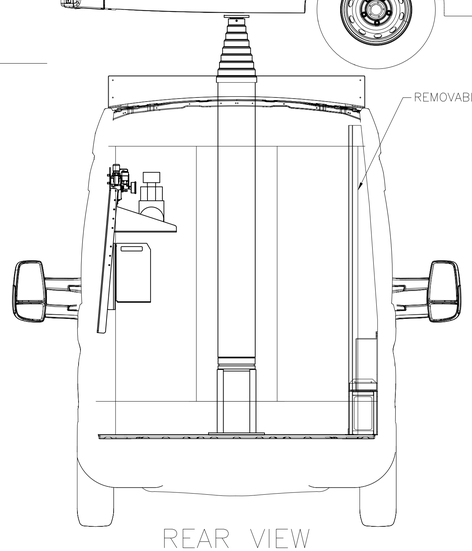

REAR VIEW

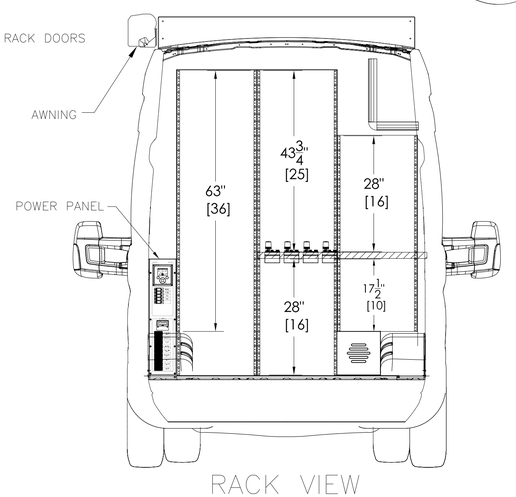

RACK VIEW

PRELIMINARY USE ONLY
THIS DRAWING IS FOR REPRESENTATION ONLY. DETAILED ENGINEERING DRAWINGS WILL BE CREATED FOR MANUFACTURING. CHANGES MAY BE REQUIRED TO ACCOMODATE MANUFACTURING REQUIREMENTS AND CUSTOMER SPECIFICATIONS.

THIS DRAWING IS THE PROPERTY OF FRONTLINE COMMUNICATIONS CORPORATION. IT IS CONFIDENTIAL AND ALL RIGHTS ARE RESERVED. IT SHALL NOT BE REPRODUCED, COPIED, LENT, NOR USED FOR ANY PURPOSE OTHER THAN THAT FOR WHICH IT IS SPECIFICALLY FURNISHED.

DO NOT SCALE THIS DRAWING
DIMENSIONS ARE IN INCHES UNLESS OTHERWISE SPECIFIED
TOLERANCES:
ANGULAR: ± 1° BEND: ± 1°
2 PLACE DECIMAL ± .010
3 PLACE DECIMAL ± .005
FRACTIONS ± 1/16

MATERIAL: N/A
FINISH: N/A

JOB NUMBER OR PRODUCT LINE: 71988
DRAWN BY: VLD
DATE: 11/08/2022
CHECKED BY: MD
DATE: 11/14/2022
SHEET: 1 OF 1
SCALE: 1:38

FRONTLINE COMMUNICATIONS
An Oshkosh Corporation Company
12770 44th Street North
Clearwater, FL. 33762-4713
(727) 573-0400
FAX (727) 571-3295

PALM BEACH COUNTY
ELEVATION DRAWING
Transit EL HR

SIZE: B
DWG NO. 053451